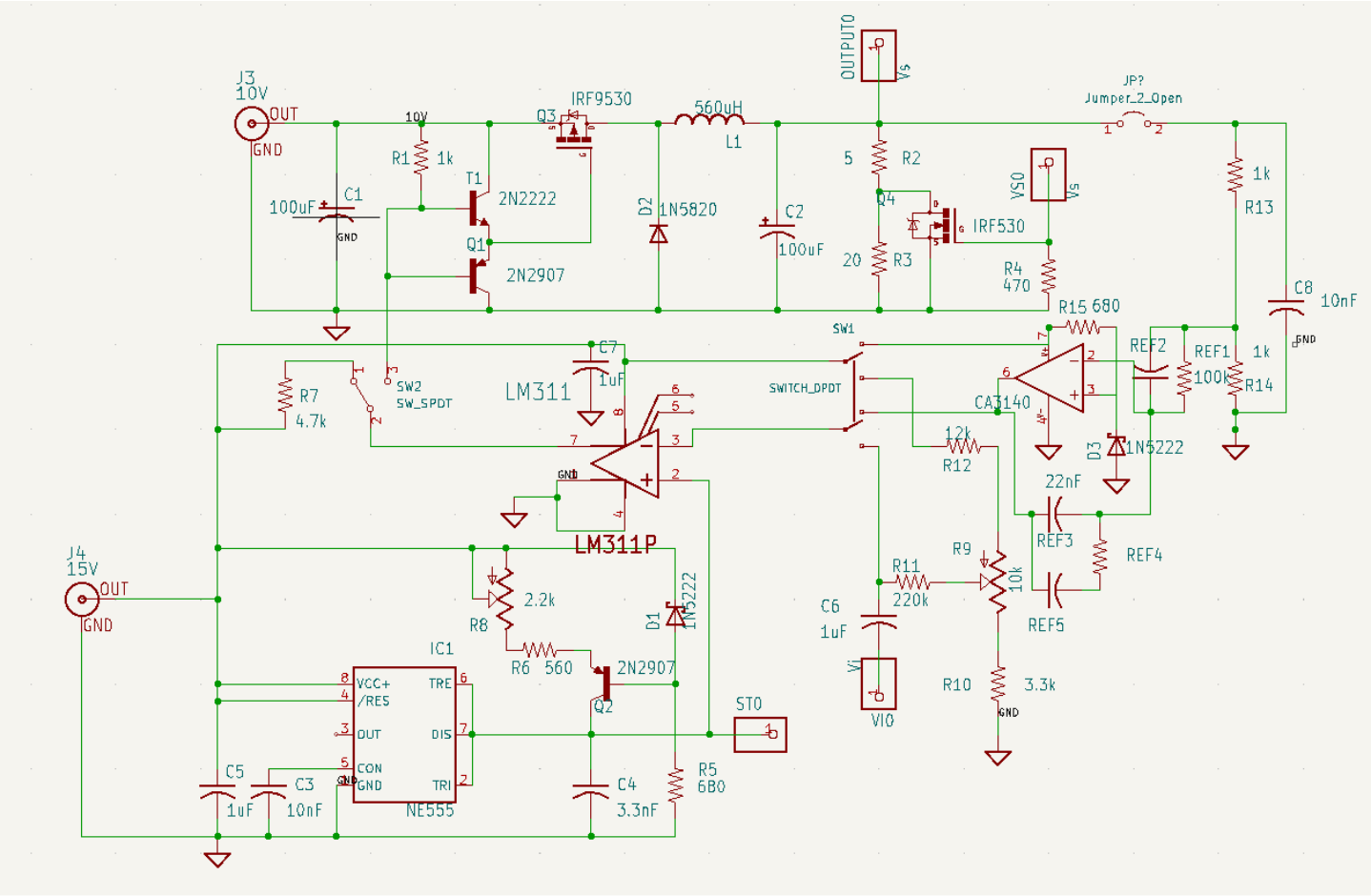
J3
10V
OUT
GND
10V
R1 1k
Q3
IRF9530
560uH
L1
OUTPUT0
Vs
JP?
Jumper_2_Open
100uF
C1
GND
T1
2N2222
Q1
2N2907
D2
1N5820
C2
100uF
5
R2
Q4
IRF530
20
R3
VS0
Vs
R4
470
1k
R13
C8
10nF
GND
R15 680
SW1
C7
1uF
LM311
SWITCH_DPDT
R7
4.7k
SW2
SW_SPDT
CA3140
REF2
REF1
100k
1k
R14
12k
R12
D3
1N5222
22nF
REF3
REF4
REF5
LM311P
J4
15V
OUT
GND
2.2k
R8
R6 560
2N2907
Q2
D1
1N5222
R9
10k
R11
220k
C6
1uF
Vi
VI0
R10
3.3k
GND
IC1
VCC+
/RES
OUT
CON
GND
TRE
DIS
TRI
NE555
ST0
C5
1uF
C3
10nF
C4
3.3nF
R5
680

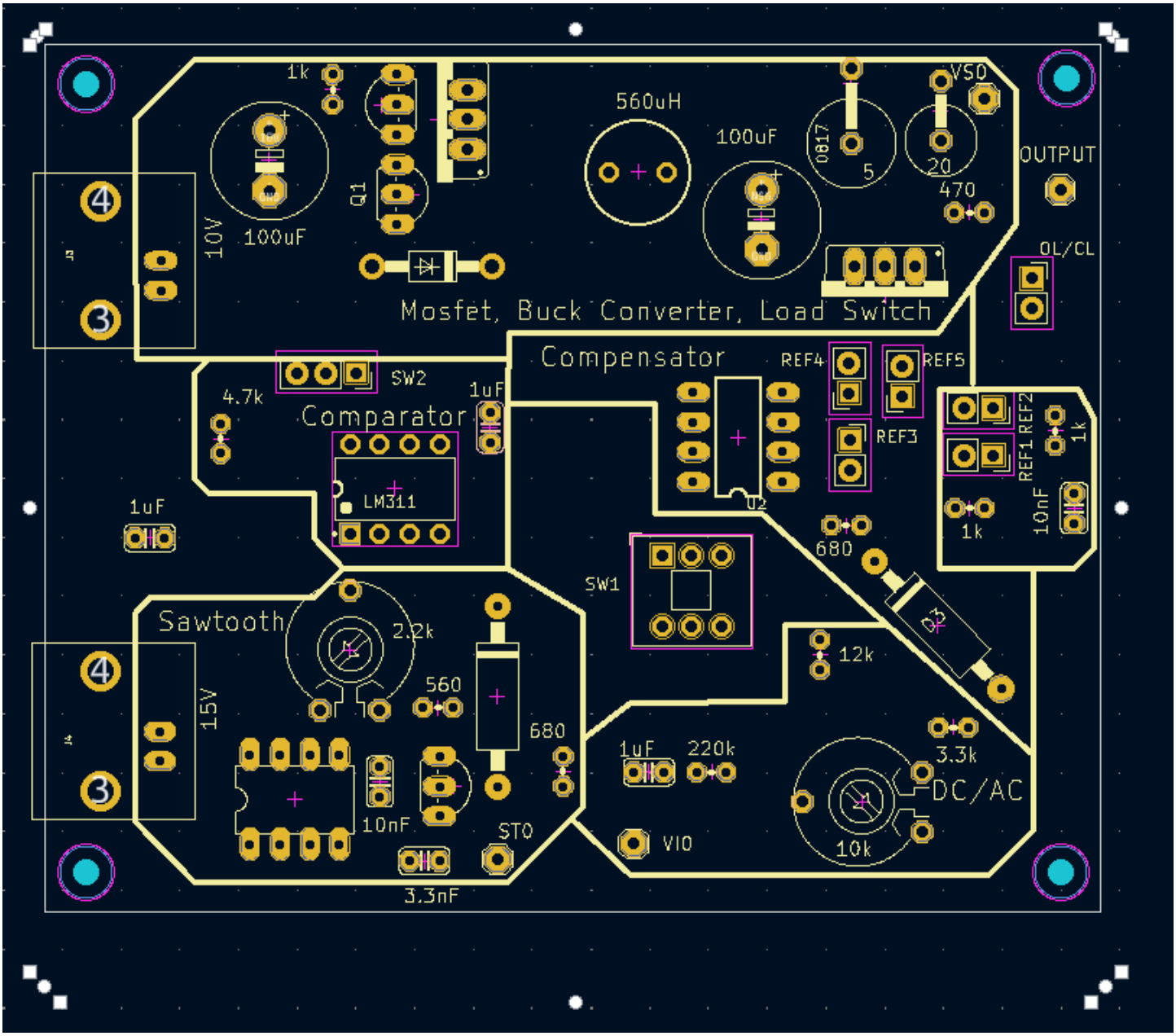
1k
10V
100uF
Q1
560uH
100uF
0817
5
VSO
20
470
OUTPUT
OL/CL
Mosfet, Buck Converter, Load Switch
Compensator
REF4
REF5
REF3
REF1
REF2
1k
10nF
1k
SW2
4.7k
1uF
Comparator
LM311
U2
1uF
680
SW1
Sawtooth
2.2k
12k
560
15V
680
1uF
220k
3.3k
DC/AC
10nF
STO
VIO
10k
3.3nF